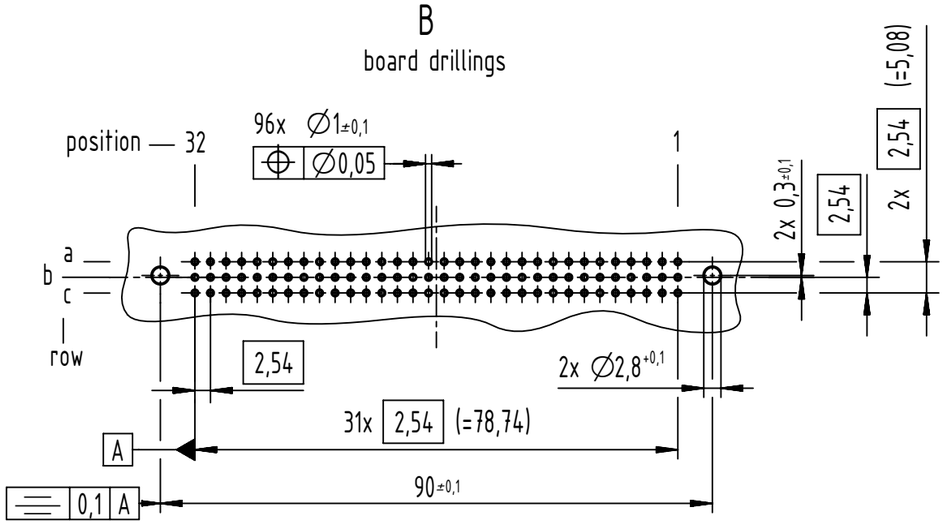


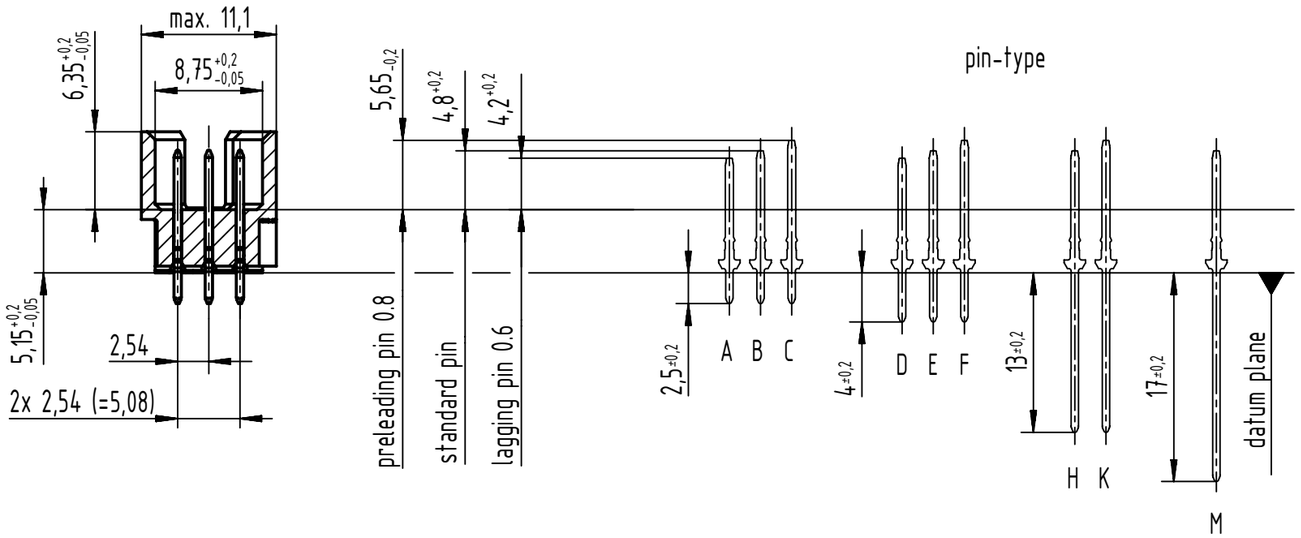


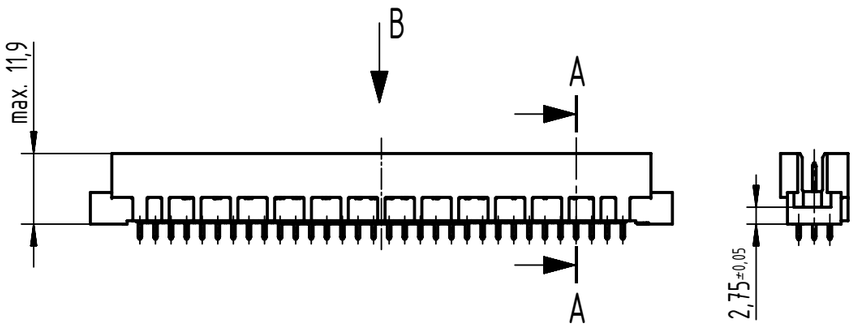


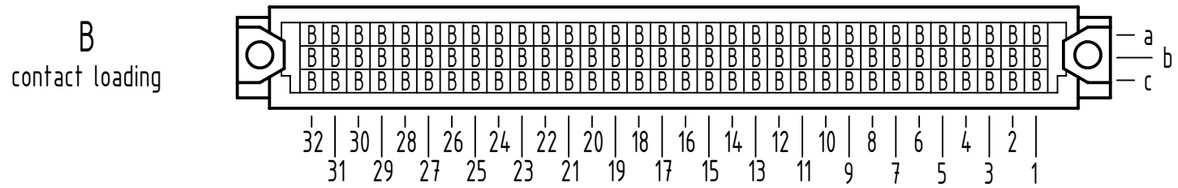


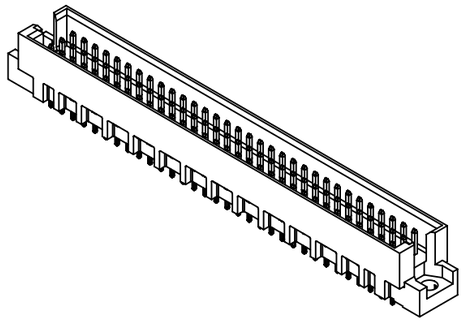

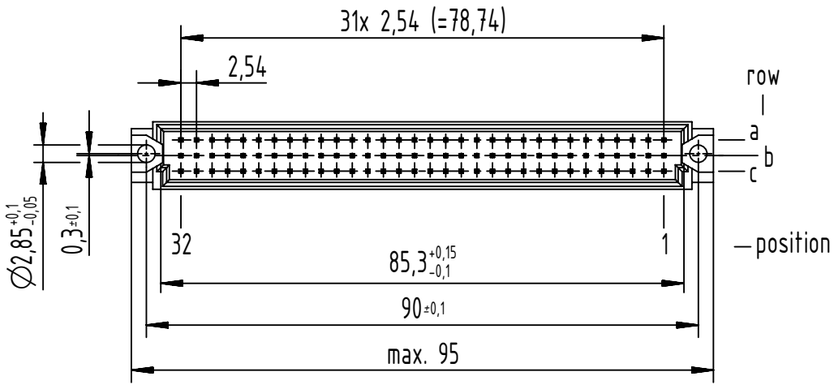


further information see product data sheet

| | |
|---|---|
| 09 73 196 6519 | 2 |
| part no. | performance level |

All Dimensions in mm
Original Size DIN A3

Scale 1:1

Free size tol. complementary IEC 60603-2

Ref.

Sub.

All rights reserved

Department EL PD

HARTING
D-32339 Espelkamp

| Created by | Inspected by | Standardisation | Date | State |
|---|---|---|---|---|
| 101441 | lehnert | | 26-May-2025 | 40 - Released |

Title: DIN Signal type R male solder 2.5 96-pole THR

Doc-Key / ECM-Nr.: DS00185959

| Type | Design Number | SAP Mat. Number | Rev. | Page |
|---|---|---|---|---|
| TB | DS00185959 | 09731966519 | G | 1/1 |

A3